DELTA

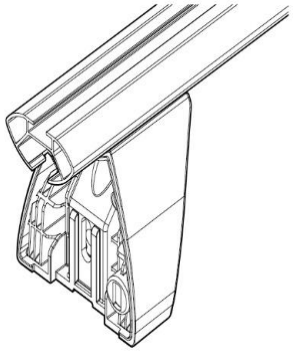

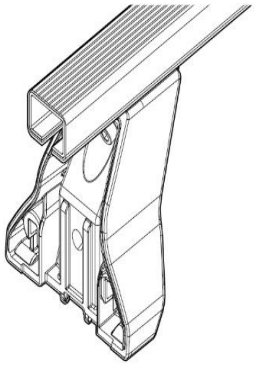

OMEGA

PAG. 4

FIXING KIT DELTA

1

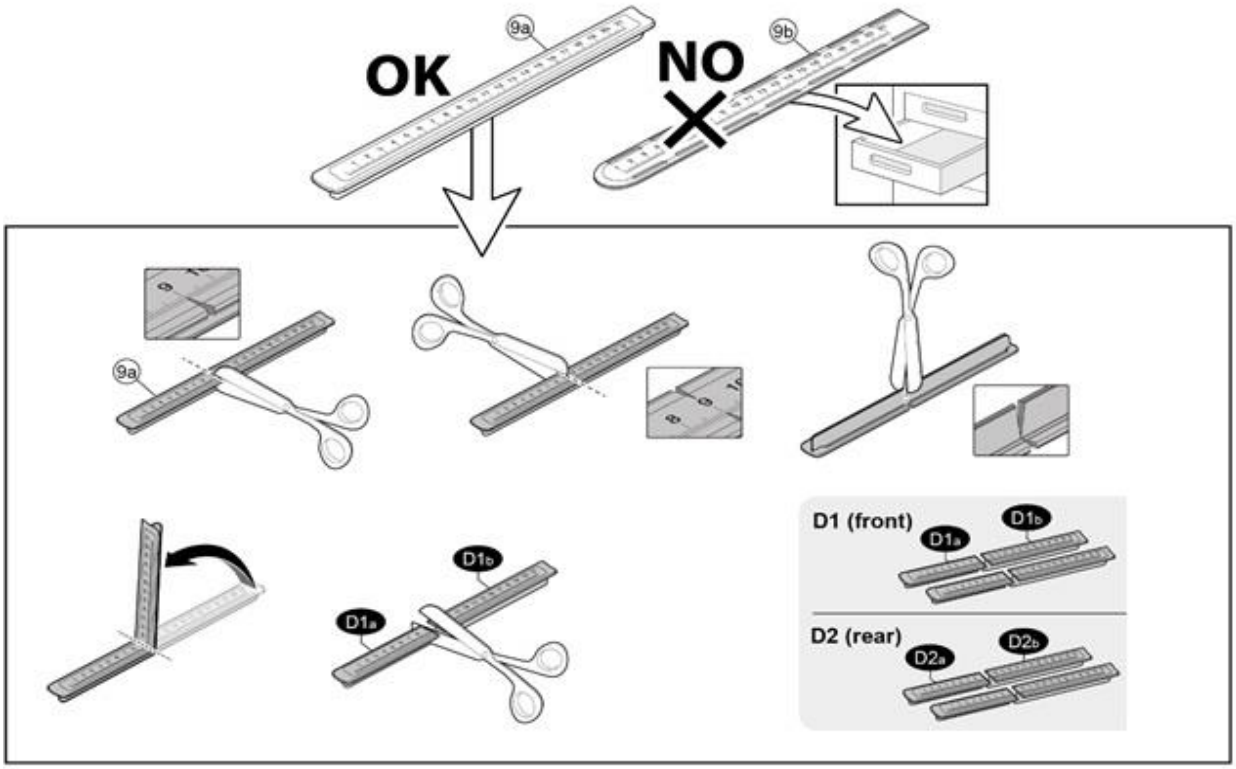

MANUFACTURER	MODEL CAR	DOORS	MODEL YEAR	D1	D2
AUDI	*A1 (GB) Sportback*	*5*	*19>*	*12,9*	*10,0*
BMW	*X4 (G02)*	*5*	*18>*	*10,9*	*10,4*
JAGUAR	*XF (X260)*	*4*	*15>20*	*6,2*	*7,7*
JAGUAR	*XF*	*4*	*21>*	*6,2*	*7,7*
KIA	*Ceed (CD) SportsWagon*	*5*	*18>*	*7,0*	*5,6*
LEXUS	*UX (ZA10)*	*5*	*18>*	*5,6*	*4,7*
MAZDA	*6 / Atenza (GJ) Station Wagon*	*5*	*12>17*	*8,9*	*12,1*
MAZDA	*6 III (GL) Sedan*	*5*	*17>*	*9,8*	*7,7*
NISSAN	*Juke (F16)*	*5*	*19>*	*12,3*	*11,4*
PEUGEOT	*2008*	*5*	*20>*	*12,4*	*11,8*
SUBARU	*Outback V*	*5*	*15>*	*8,1*	*6,2*

2

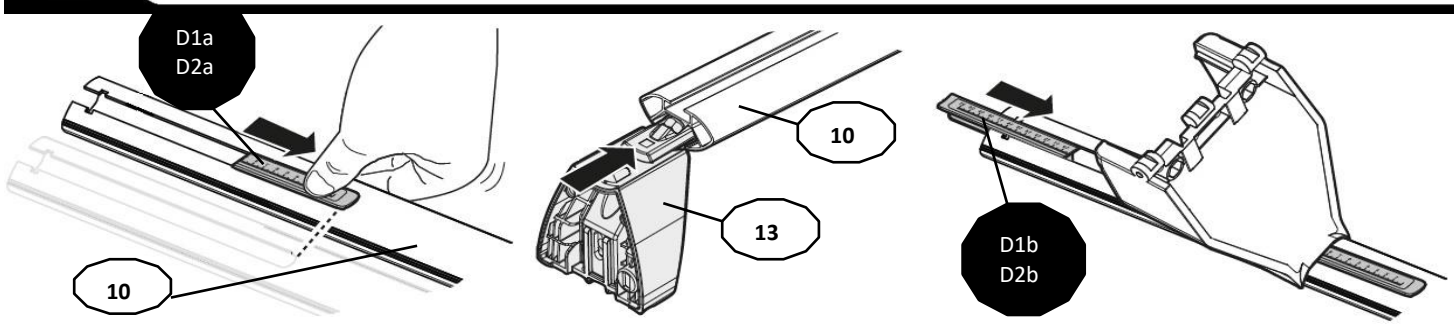

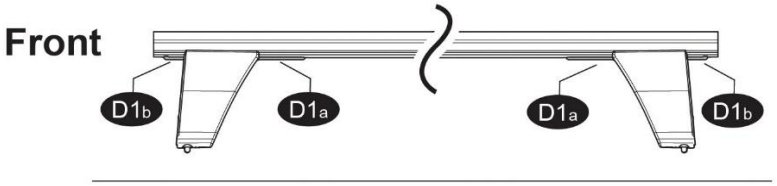

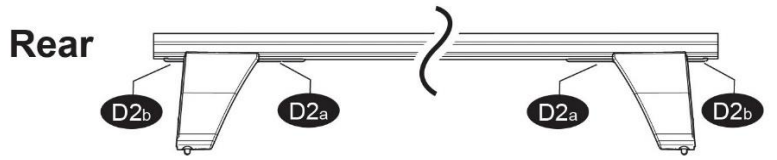

3

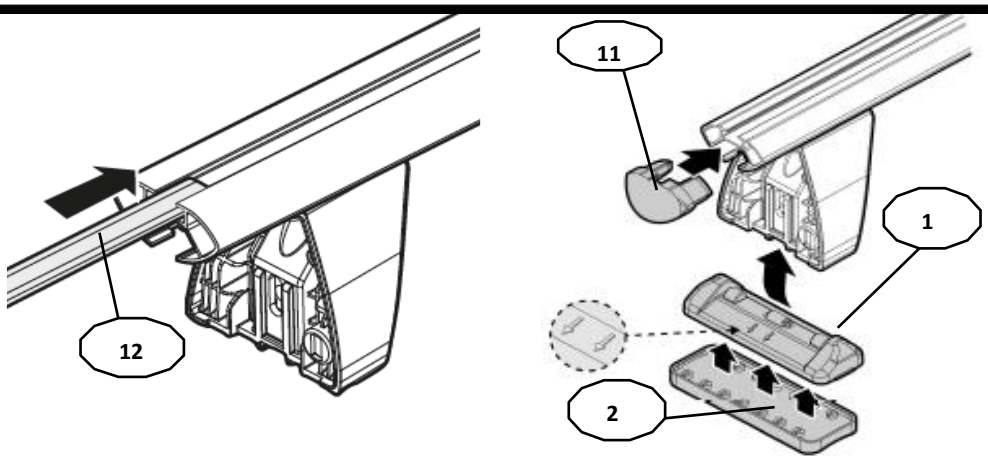

4

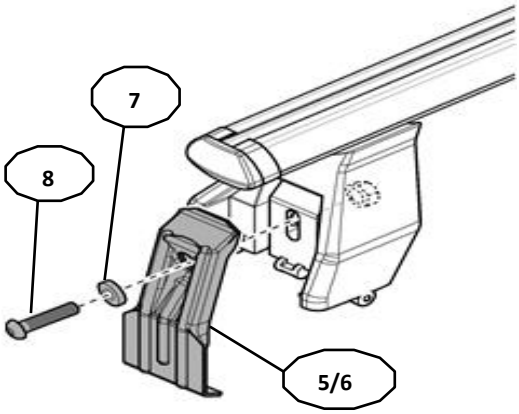

Front	Rear
5	6

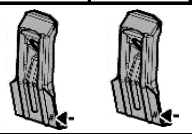

1	38
2X	2X

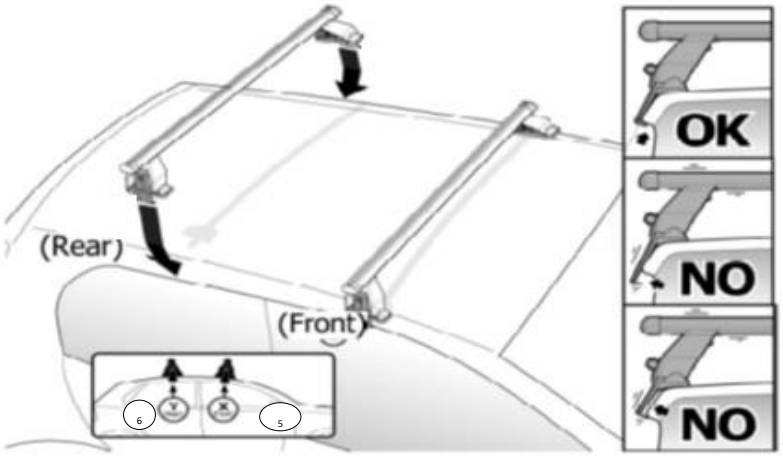

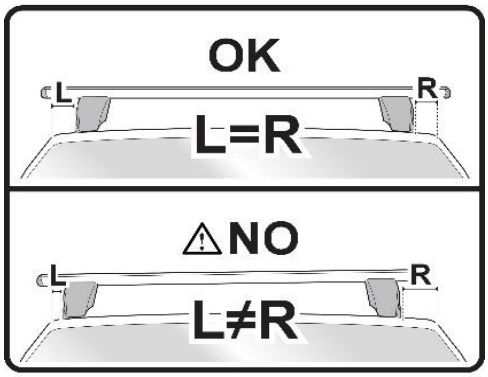

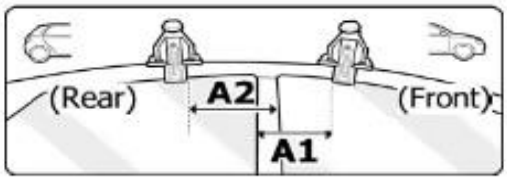

OR

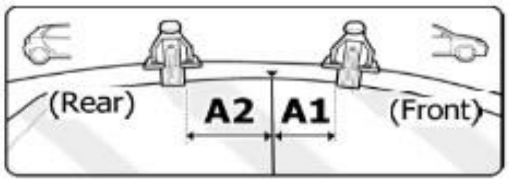

MANUFACTURER	MODEL CAR	DOORS	MODEL YEAR	A1	A2	A1	A2
				cm	cm	in	in
AUDI	*A1 (GB) Sportback*	*5*	*19>*	*27*	*36*	*10,6*	*14,2*
BMW	*X4 (G02)*	*5*	*18>*	*30*	*38*	*11,8*	*15,0*
JAGUAR	*XF (X260)*	*4*	*15>20*	*15*	*48*	*5,9*	*18,9*
JAGUAR	*XF*	*4*	*21>*	*15*	*48*	*5,9*	*18,9*
KIA	*Ceed (CD) SportsWagon*	*5*	*18>*	*10*	*54*	*3,9*	*21,3*
LEXUS	*UX (ZA10)*	*5*	*18>*	*24*	*35*	*9,4*	*13,8*
MAZDA	*6 / Atenza (GJ) Station Wagon*	*5*	*12>17*	*4*	*62*	*1,6*	*24,4*
MAZDA	*6 III (GL) Sedan*	*5*	*17>*	*19*	*45*	*7,5*	*17,7*
NISSAN	*Juke*	*5*	*19>*	*26*	*39*	*10,2*	*15,4*
PEUGEOT	*2008*	*5*	*20>*	*22*	*42*	*8,7*	*16,5*
SUBARU	*Outback V*	*5*	*15>*	*17*	*52*	*6,7*	*20,5*

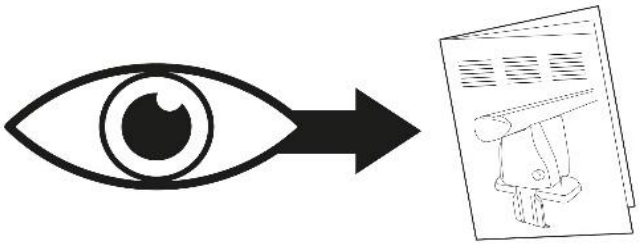

MANUAL DELTA

FIXING KIT OMEGA

2

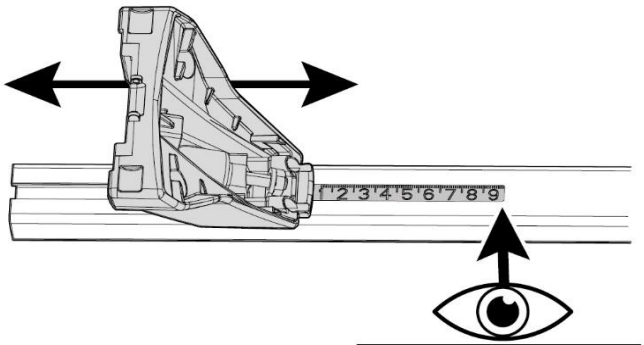

D1 (Front)	D2 (Rear)
xxx	xxx

MANUFACTURER	MODEL CAR	DOORS	MODEL YEAR	D1	D2
AUDI	*A1 (GB) Sportback*	*5*	*19>*	*12,9*	*10,0*
BMW	*X4 (G02)*	*5*	*18>*	*10,9*	*10,4*
JAGUAR	*XF (X260)*	*4*	*15>20*	*6,2*	*7,7*
JAGUAR	*XF*	*4*	*21>*	*6,2*	*7,7*
KIA	*Ceed (CD) SportsWagon*	*5*	*18>*	*7,0*	*5,6*
LEXUS	*UX (ZA10)*	*5*	*18>*	*5,6*	*4,7*
MAZDA	*6 / Atenza (GJ) Station Wagon*	*5*	*12>17*	*8,9*	*12,1*
MAZDA	*6 III (GL) Sedan*	*5*	*17>*	*9,8*	*7,7*
NISSAN	*Juke*	*5*	*19>*	*12,3*	*11,4*
PEUGEOT	*2008*	*5*	*20>*	*12,4*	*11,8*
SUBARU	*Outback V*	*5*	*15>*	*8,1*	*6,2*

3

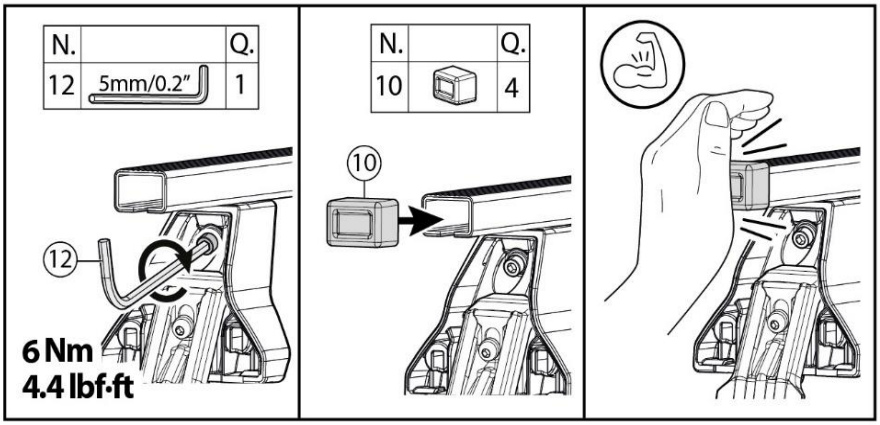

4

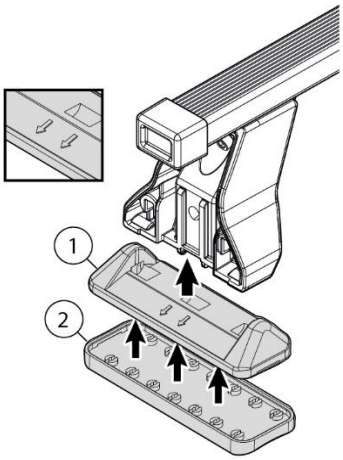

5

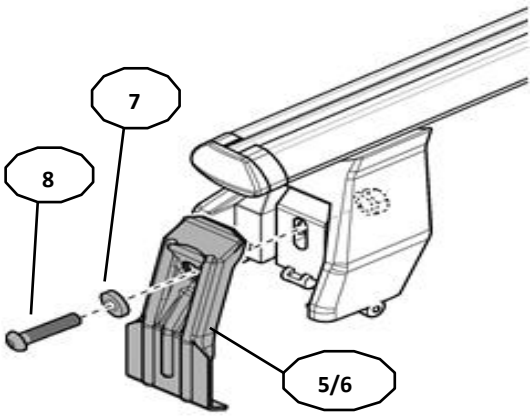

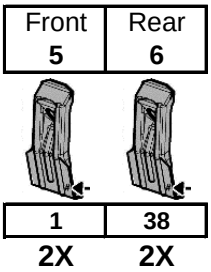

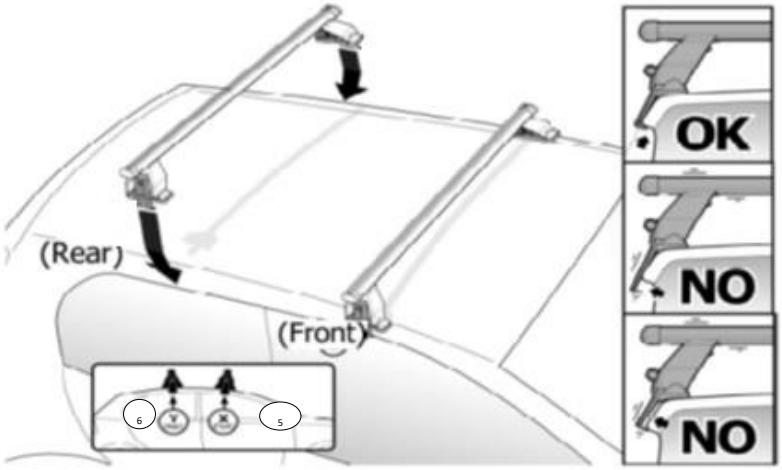

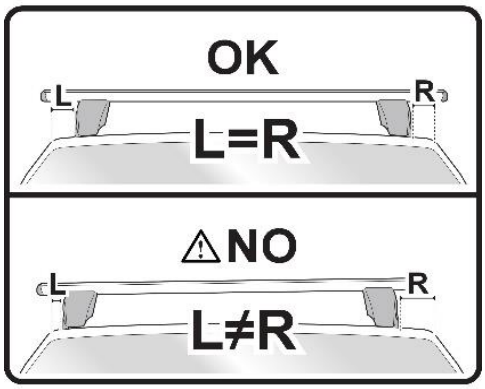

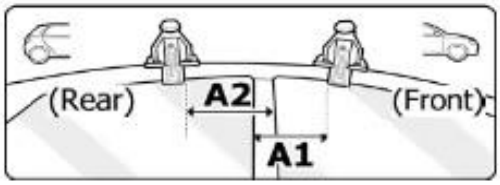

OR

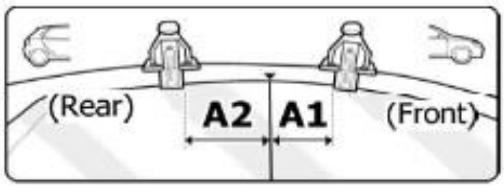

MANUFACTURER	MODEL CAR	DOORS	MODEL YEAR	A1	A2	A1	A2
				cm	cm	in	in
AUDI	*A1 (GB) Sportback*	*5*	*19>*	*27*	*36*	*10,6*	*14,2*
BMW	*X4 (G02)*	*5*	*18>*	*30*	*38*	*11,8*	*15,0*
JAGUAR	*XF (X260)*	*4*	*15>20*	*15*	*48*	*5,9*	*18,9*
JAGUAR	*XF*	*4*	*21>*	*15*	*48*	*5,9*	*18,9*
KIA	*Ceed (CD) SportsWagon*	*5*	*18>*	*10*	*54*	*3,9*	*21,3*
LEXUS	*UX (ZA10)*	*5*	*18>*	*24*	*35*	*9,4*	*13,8*
MAZDA	*6 / Atenza (GJ) Station Wagon*	*5*	*12>17*	*4*	*62*	*1,6*	*24,4*
MAZDA	*6 III (GL) Sedan*	*5*	*17>*	*19*	*45*	*7,5*	*17,7*
NISSAN	*Juke*	*5*	*19>*	*26*	*39*	*10,2*	*15,4*
PEUGEOT	*2008*	*5*	*20>*	*22*	*42*	*8,7*	*16,5*
SUBARU	*Outback V*	*5*	*15>*	*17*	*52*	*6,7*	*20,5*

6

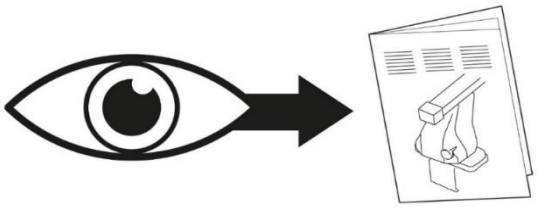

MANUAL OMEGA

NOTE:

……..

……..

……..